4=1/4X1/2 U-BOLTS-A
8=1/4 LOCK NUTS-B
8=1/4 USS WASHERS-C
8=1/4 ROD CAPS-D
4=1 1/2" BLACK ROUND PLUGS-E

STRONG SM MADE™
BY SAVANT MANUFACTURING, INC.
www.savantmfg.com

# # RBG-28
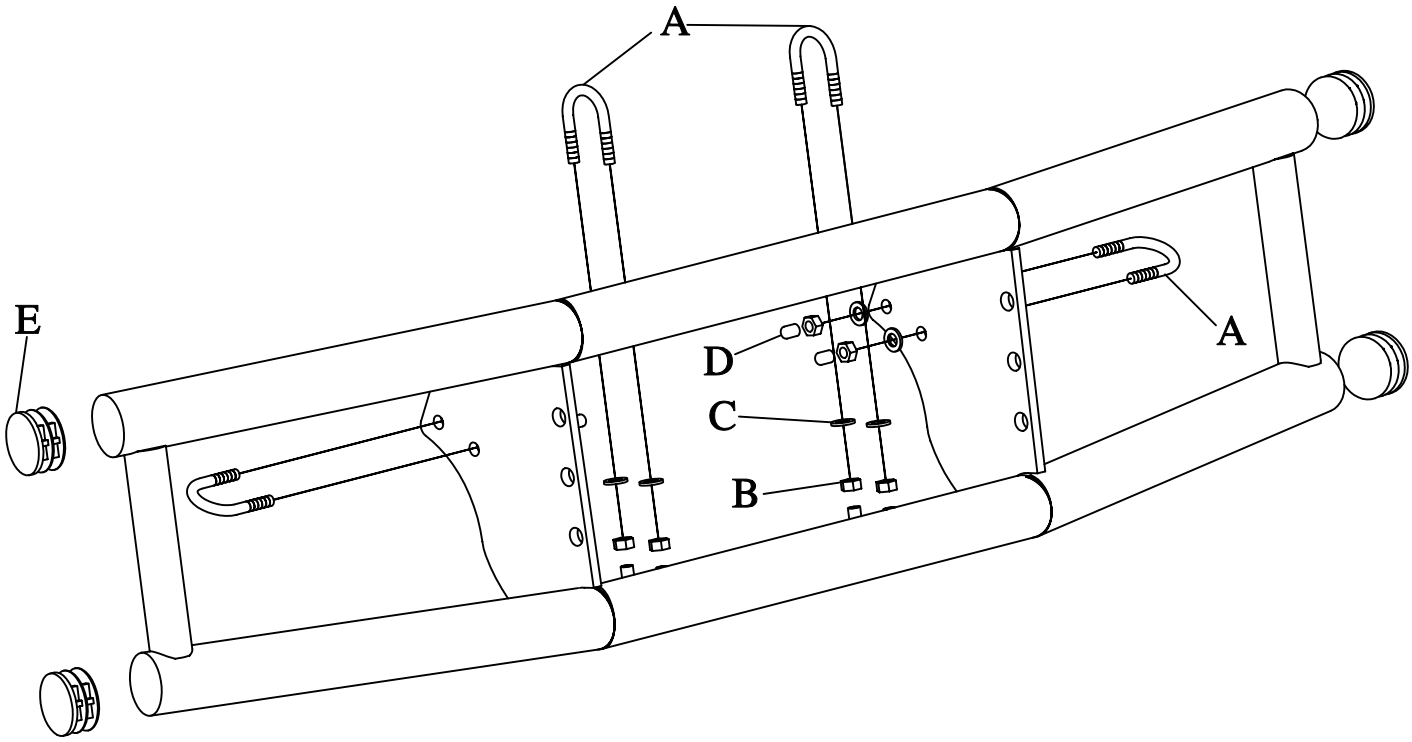
HONDA RANCHER 420